EN900 DIMENSIONS
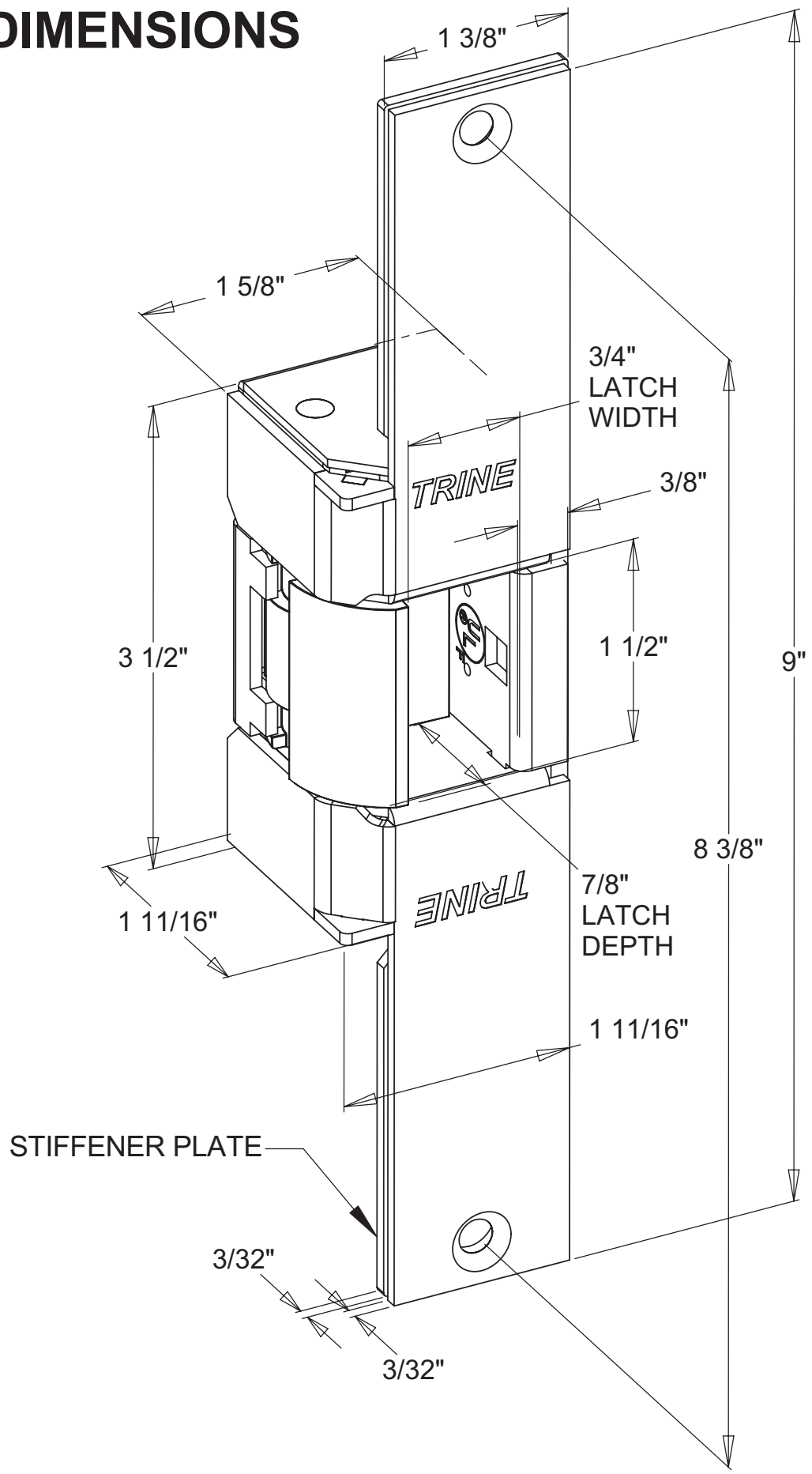
TRINE ACCESS TECHNOLOGY
1440 Ferris Place • Bronx • New York • 10461-3699
Telephone Number: (718) 829-2332
Fax Number: (718) 829-6405
Email: CustomerService@TrineOnline.com
Website: www.TrineOnline.com