# EN400
## Electric Strike Dimension
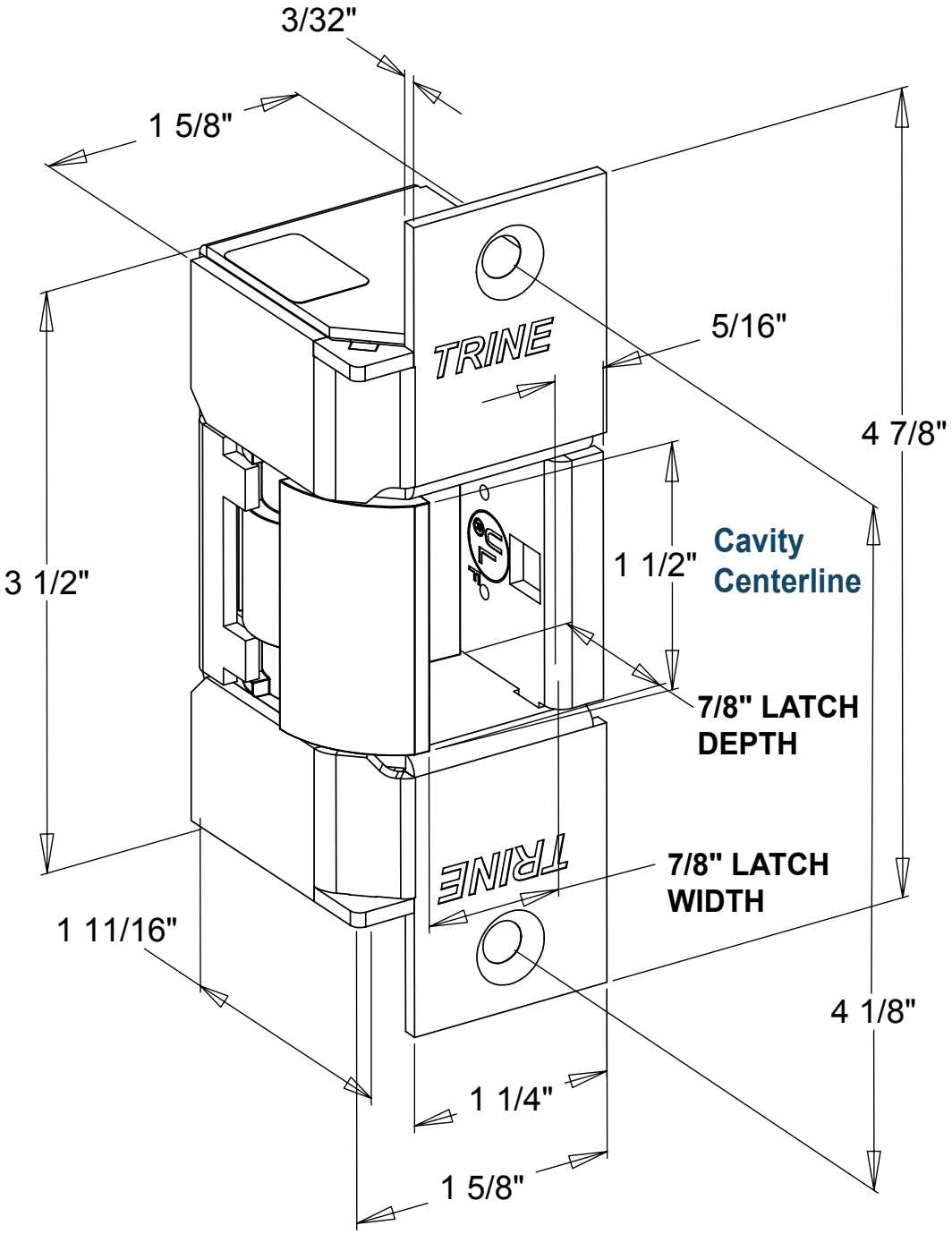
1440 Ferris Place • Bronx • New York • 10461-3699
Telephone Number: (718) 829-2332
Fax Number: (718) 829-6405
Email: CustomerService@Trineonline.com
Website: www.Trineonline.com